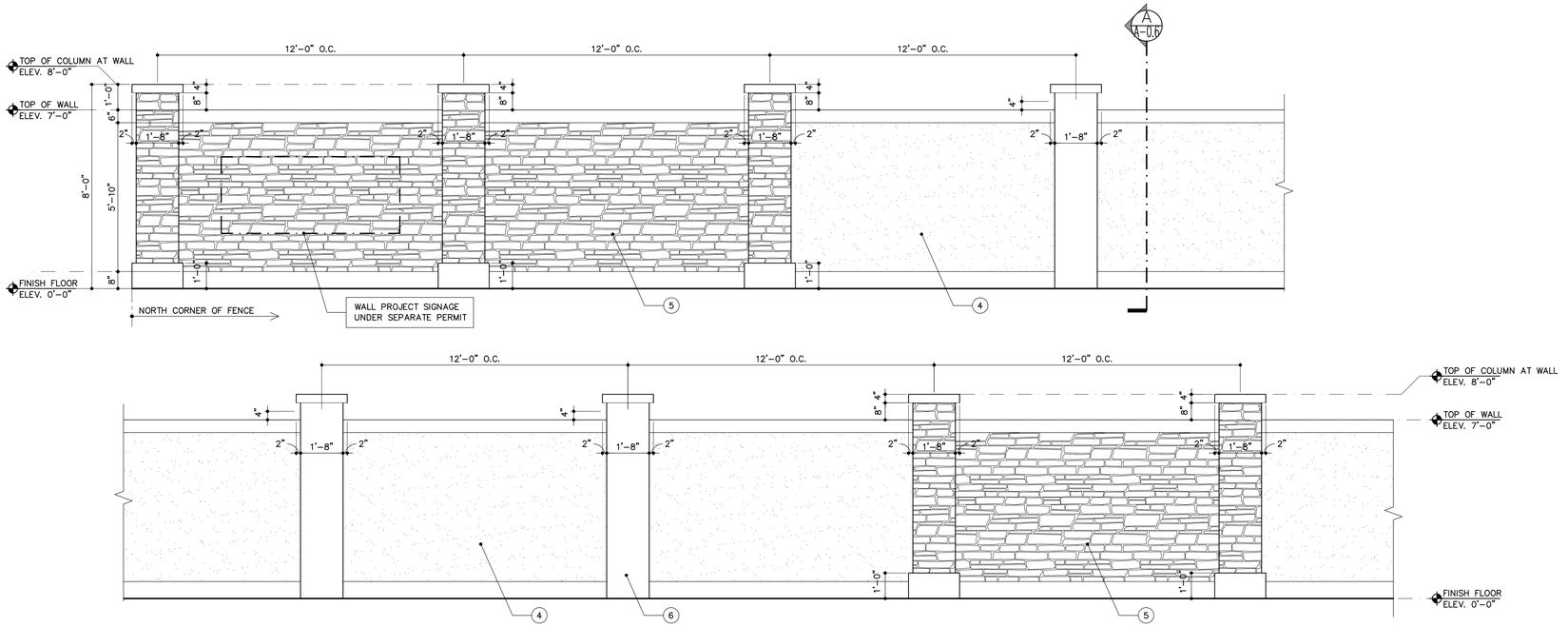

PARTIAL PRE-CAST CONCRETE FENCE ELEVATION

NOTE: STACKED STONE VENEER STAMPED FINISH AT EVERY FIFTH PANEL SCALE: 3/8"= 1'-0"

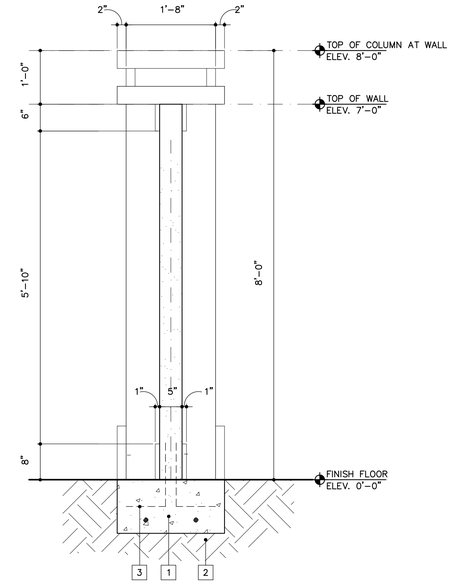

SECTION A

SCALE: 3/4"= 1'-0"

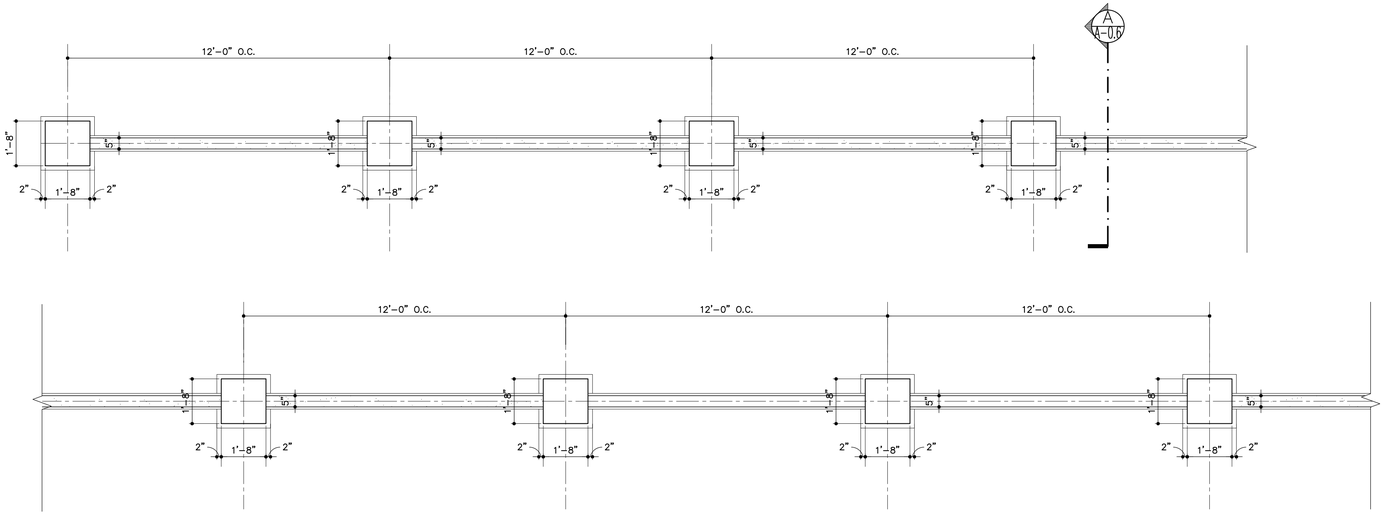

PARTIAL PRE-CAST CONCRETE FENCE PLAN

SCALE: 3/8"= 1'-0"

ELEVATION LEGEND

1. CONCRETE FOUNDATION (REFER TO STRUCTURAL DWGS.)
2. COMPACTED FILL (REFER TO STRUCTURAL DWGS.)
3. STEEL REINFORCING PER MANUFACTURER
4. PRE-CAST CONCRETE PANEL W/ TEXTURED FINISH
5. PRE-CAST CONCRETE PANEL WITH STACKED STONE FINISH
6. PRE-CAST CONCRETE POST

SECTIONS LEGEND

1. CONCRETE FOUNDATION (REFER TO STRUCTURAL DWGS.)
2. COMPACTED FILL (REFER TO STRUCTURAL DWGS.)
3. STEEL REINFORCING PER MANUFACTURER
4. PRE-CAST CONCRETE PANEL W/ TEXTURED FINISH
5. PRE-CAST CONCRETE PANEL WITH STACKED STONE FINISH
6. PRE-CAST CONCRETE POST

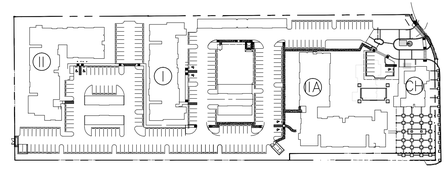

KEY PLAN

N.T.S.

SITE FENCE

REVISIONS	BY
11-07-13 P&Z SUBMITTAL	#2

WILTON TWENTY FOURTH ST. RESIDENCES
FOR:
ASCEND WILTON TWENTY FOURTH STREET, LLC.
WWW.YESASCEND.COM
LOCATED AT:
WILTON MANORS, BROWARD COUNTY, FLORIDA

MSA ARCHITECTS, INC.
MIAMI OFFICE
7695 SW 104th ST.
SUITE 100
MIAMI, FLORIDA 33156
(305) 273-9911

MSA ARCHITECTS
ARCHITECTURE & PLANNING

COPYRIGHT © 2011 MSA ARCHITECTS, INC. THE ARCHITECTURAL DESIGN AND DETAIL DRAWINGS FOR THIS BUILDING AND/OR OVERALL PROJECT ARE THE LEGAL PROPERTY OF AND ALL RIGHTS ARE RESERVED BY THE ARCHITECT. THEIR USE FOR REPRODUCTION, CONSTRUCTION, OR DISTRIBUTION IS PROHIBITED UNLESS AUTHORIZED IN WRITING BY THE ARCHITECT.

F:\DATA.DIR\1576.prj\DESIGN\1576-A-0.6.dwg, 11/06/13 10:35:25, stat10, JAV

DRAWN	JAV
CHECKED	-
DATE	7/08/2013
SCALE	AS SHOWN
JOB NO.	1576.PRJ
SHEET	1576-A-0.6.DWG

A-0.6

OF SHEETS